# JXD12864-11

## ①PHYSICAL DIMENSION

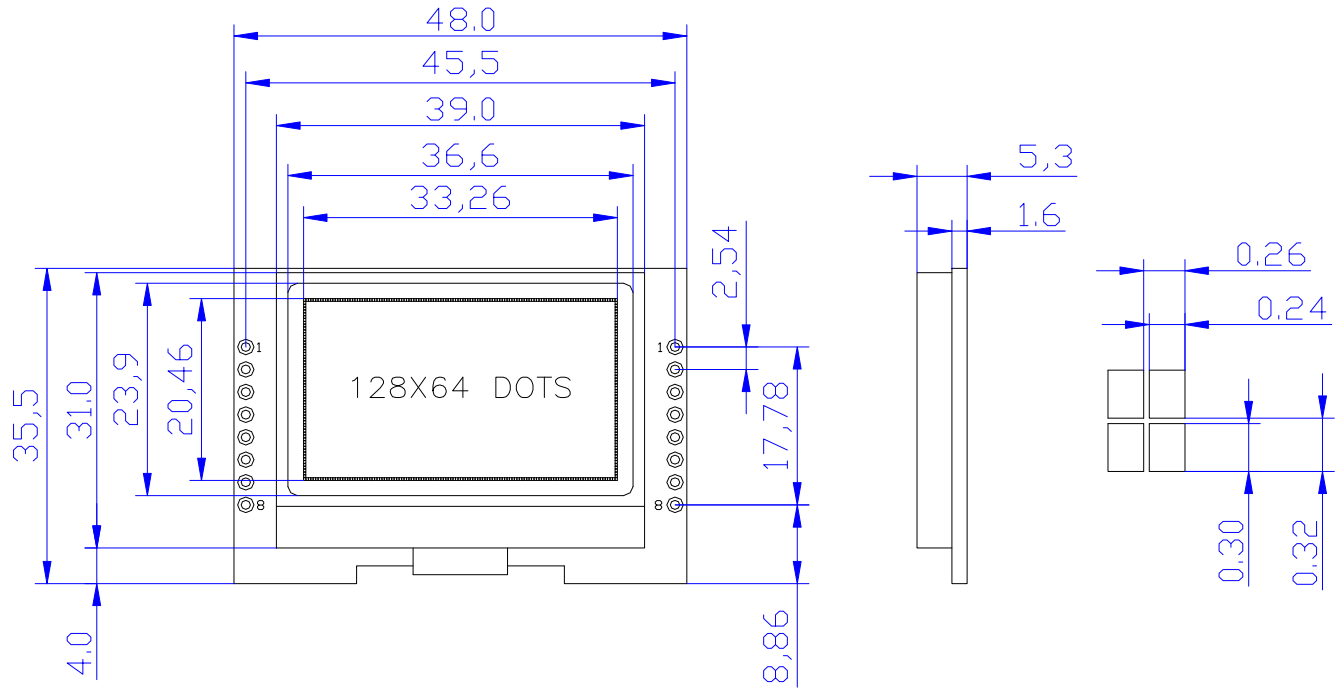


## ②MECHANICAL SPECIFICATIONS

| Item | Nominal Dimensions(mm) |
|---|---|
| Module Size(W×H×T) | 48.0×35.5.0×5.3 |
| Viewing Area(W×H) | 36.6×23.9 |
| Dot Pitch(W×H) | 0.24×0.30 |
| Dot Size(W×H) | 0.26×0.32 |

## ③PIN CONNECTIONS

| Pin | Symbol | Function |
|---|---|---|
| 1 | VSS | GND |
| 2 | VDD | Power supply for Logic(+3V) |
| 3 | SDA | Data Input |
| 4 | SCL | Serial Clock |
| 5 | A0 | H: Data; L: Instruction Code |
| 6 | /RST | Reset Signal (Active LOW ) |
| 7 | /CS1 | Chip Selection For U1 |
| 8 | LED | H:On L:Off |
| | | |
| | | |
| | | |
| | | |
| | | |

## ④FEATURE

| | |
|---|---|
| LCD Type & Colour | STN:Yellow-Green,Blue,FSTN |
| View Angle | 6 O'clock |
| Display Type | Positive Type,Negative Type |
| Control IC & Package | ST7565P or EQV,COG |
| Operating Temperature | -20℃～70℃ |
| Storage Temperature | -30℃～80℃ |

## ⑤ELECTRICAL CHARACTERISTICS

| Item | Symbol | Test Condition | Typ. | Unit |
|---|---|---|---|---|
| Operating Voltage | Vdd | Ta=25℃ | 3.0 | V |
| Supply Current | Idd | Ta=25℃ , Vdd=3.0V | 25 | mA |